Document Number: KT33771TPLUG
Rev. 2.0, 10/2016

KIT33771TPLEVB evaluation board

Featuring the MC33771 battery cell controller IC

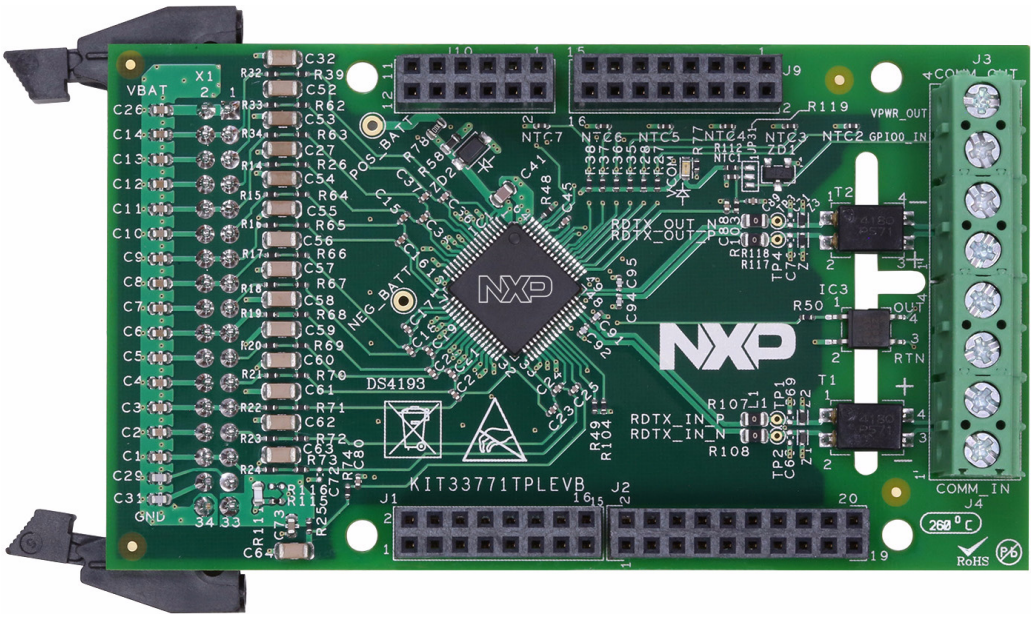

Figure 1. KIT33771TPLEVB

© 2016 NXP B.V.

Table of Contents

1 Important notice . . . 3
2 Getting started . . . 4
3 Getting to know the hardware . . . 5
4 Accessory transceiver board . . . 16
5 Configuring the hardware . . . 17
6 Schematic . . . 23
7 Board Layout . . . 24
8 Board bill of materials . . . 26
9 Accessory item bill of materials . . . 28
10 References . . . 29
11 Revision history . . . 30

1 Important notice

NXP provides the enclosed product(s) under the following conditions:

This evaluation kit is intended for use of ENGINEERING DEVELOPMENT OR EVALUATION PURPOSES ONLY. It is provided as a sample IC pre-soldered to a printed circuit board to make it easier to access inputs, outputs, and supply terminals. This evaluation board may be used with any development system or other source of I/O signals by simply connecting it to the host MCU or computer board via off-the-shelf cables. This evaluation board is not a Reference Design and is not intended to represent a final design recommendation for any particular application. Final device in an application will be heavily dependent on proper printed circuit board layout and heat sinking design as well as attention to supply filtering, transient suppression, and I/O signal quality.

The goods provided may not be complete in terms of required design, marketing, and or manufacturing related protective considerations, including product safety measures typically found in the end product incorporating the goods. Due to the open construction of the product, it is the user's responsibility to take any and all appropriate precautions with regard to electrostatic discharge. In order to minimize risks associated with the customers applications, adequate design and operating safeguards must be provided by the customer to minimize inherent or procedural hazards. For any safety concerns, contact NXP sales and technical support services.

Should this evaluation kit not meet the specifications indicated in the kit, it may be returned within 30 days from the date of delivery and will be replaced by a new kit.

NXP reserves the right to make changes without further notice to any products herein. NXP makes no warranty, representation or guarantee regarding the suitability of its products for any particular purpose, nor does NXP assume any liability arising out of the application or use of any product or circuit, and specifically disclaims any and all liability, including without limitation consequential or incidental damages. “Typical” parameters can and do vary in different applications and actual performance may vary over time. All operating parameters, including “Typical”, must be validated for each customer application by customer’s technical experts.

NXP does not convey any license under its patent rights nor the rights of others. NXP products are not designed, intended, or authorized for use as components in systems intended for surgical implant into the body, or other applications intended to support or sustain life, or for any other application in which the failure of the NXP product could create a situation where personal injury or death may occur.

Should the Buyer purchase or use NXP products for any such unintended or unauthorized application, the Buyer shall indemnify and hold NXP and its officers, employees, subsidiaries, affiliates, and distributors harmless against all claims, costs, damages, and expenses, and reasonable attorney fees arising out of, directly or indirectly, any claim of personal injury or death associated with such unintended or unauthorized use, even if such claim alleges NXP was negligent regarding the design or manufacture of the part. NXP™ and the NXP logo are trademarks of NXP Semiconductor, Inc. All other product or service names are the property of their respective owners. © 2016 NXP Semiconductors, B.V.

2 Getting started

2.1 Kit contents/packing list

The **KIT33771TPLEVB** contents include:

- Assembled and tested evaluation board/module in anti-static bag
- Quick start guide

2.2 Jump start

NXP's analog product development boards serve as an easy-to-use platform for evaluating NXP products. They support a range of analog, mixed-signal and power solutions. The boards incorporate monolithic ICs and system-in-package devices that use proven high-volume SMARTMOS technology. NXP products enable longer battery life, smaller form factor, component count reduction, ease of design, lower system cost and improved performance in powering state of the art systems.

- Go to www.nxp.com/KIT33771TPLEVB
- Review your Tool Summary Page
- Look for

  Jump Start Your Design

- Download the documents, software, and other information

Once the files are downloaded, review the user guide in the bundle. The user guide includes setup instructions, BOM and schematics. Jump start bundles are available on each tool summary page with the most relevant and current information. The information includes everything needed for design.

2.3 Required equipment and software

To use this kit, you need:

- Power supply with a range of 10 V to 70 V and a current limit set initially to 1.0 A
- Oscilloscope (preferably four-channel)
- KIT33664AEVB isolated network high speed transceiver (optional)

3 Getting to know the hardware

3.1 Board overview

The KIT33771TPLEVB evaluation board serves as a hardware evaluation tool in support of NXP's MC33771 device. The MC33771 is a battery cells controller that accommodates up to fourteen lithium-Ion batteries. It is designed for use in both automotive and industrial applications. The device performs ADC conversion on the differential cell voltage and currents. It is also capable of battery charge coulomb counting and battery temperature measurements.The KIT33771TPLEVB evaluation board is an ideal platform for rapid prototyping of MC33771-based applications that involve current, voltage, and temperature sensing.

The KIT33771TPLEVB includes a transformer enabling communication in a high speed isolated communication network. The information is digitally transmitted to a microcontroller for processing. The evaluation board can be used in conjunction with a transceiver physical layer transformer driver (MC33664) to convert MCU SPI data bits to pulse bit information for the MC33771.

3.2 Board features

This KIT33771TPLEVB evaluation board's main features are as follows:

- Daisy chain device connection
- LED indicator for operation mode
- Cell-balancing resistor
- Transformer isolation
- Cell sense input with RC filter
- GPIO: digital I/O, wake-up inputs, convert trigger inputs, ratiometric analog inputs, analog inputs with absolute measurements
- Interface I²C link to an external local EEPROM to store user-defined calibration parameters
- Fault detection pin report

3.3 Block diagram

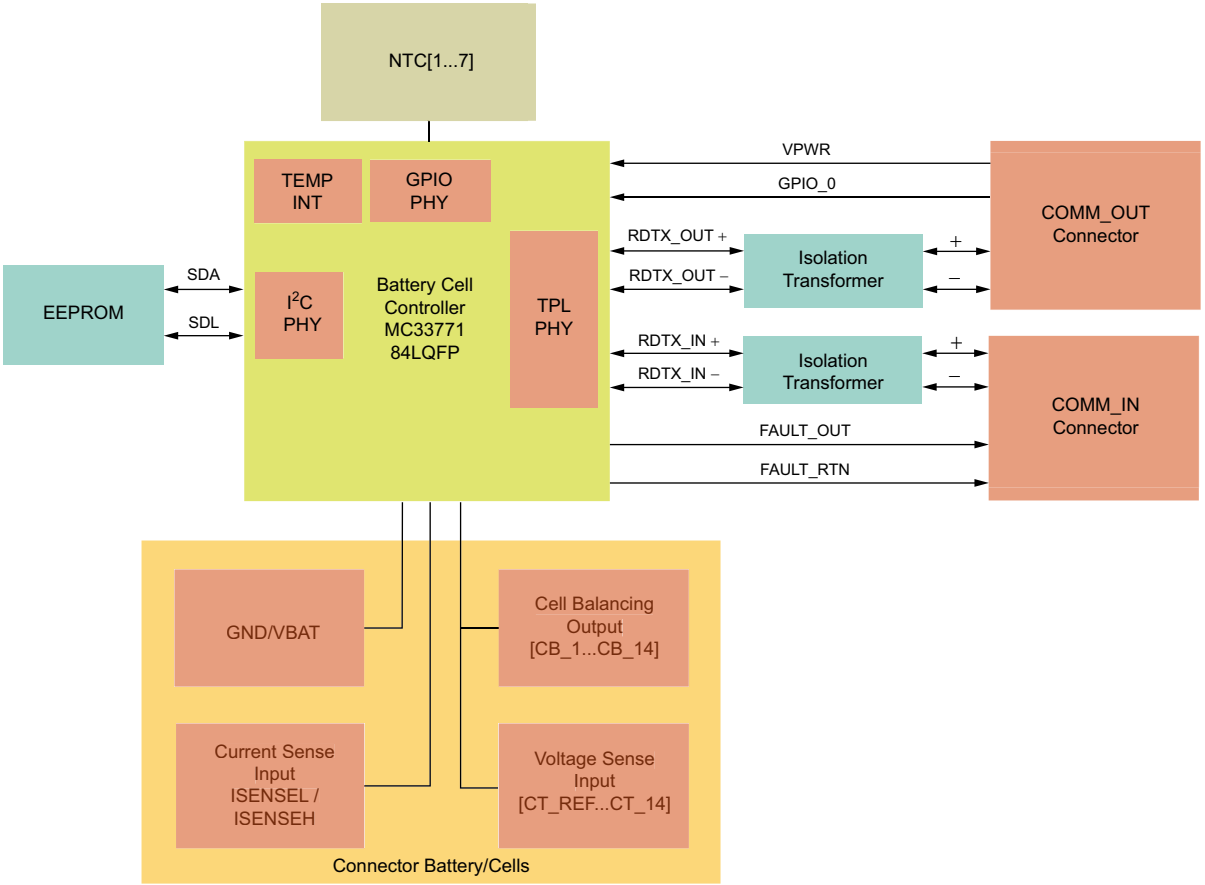

Figure 2. Block diagram

3.4 Device features

The MC33771 is a battery cell controller IC designed to monitor battery characteristics, such as voltage, current and temperature. The MC33771 contains all the circuit blocks necessary to perform synchronous battery voltage/current measurement, coulomb counting, cell temperature measurement and integrated cell balancing. The device supports the following functions:

Table 1. MC33771 device features

Device	Description	Features
MC33771	Battery cell controller	• 9.6 V VPWR, 61.6 V operation, 70 V transient • SPI or isolated 2.0 MHz differential communication • Synchronized cell voltage/current measurement with coulomb count • Total stack voltage measurement • Seven ADC/GPIO/temperature sensor inputs • Addressable on initialization • 5.0 V at 5.0 mA reference supply output • Integrated sleep mode over/undervoltage and temperature monitoring • Over/undervoltage, over/undertemperature fault verification • Onboard 300 mA passive cell balancing with diagnostics • Open cell pin detection • Internal diagnostics • Hot plug capable • Operational low-power mode

3.5 Board overview

The KIT33771TPLEVB circuit board allows the user to exercise all the functions of the MC33771 battery controller cell.

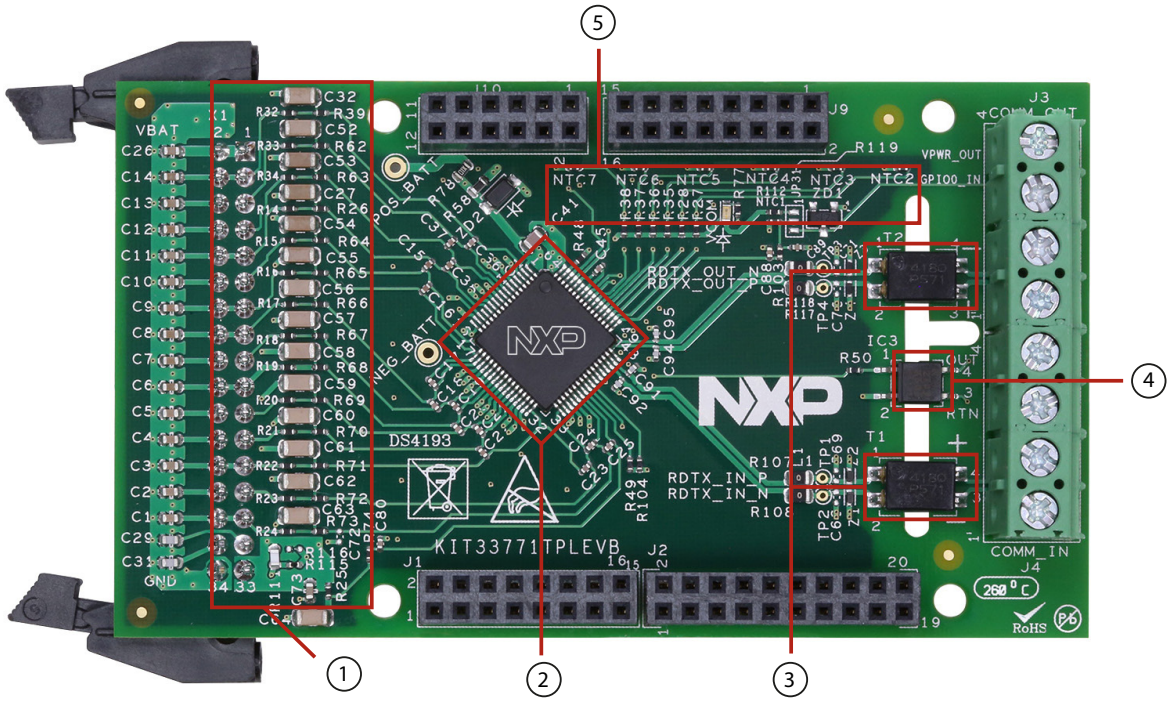

Figure 3. Board description

Table 2. Board description

Number	Description
1	Cells terminal filters — Connection to battery cells through low pass filters
2	MC33771 — Battery cell controller IC
3	Transformer isolated communication
4	Fault detection
5	GPIO:NYC[1…7]

3.6 VCOM LED

The VCOM LED is located on the board as shown in Figure 4.

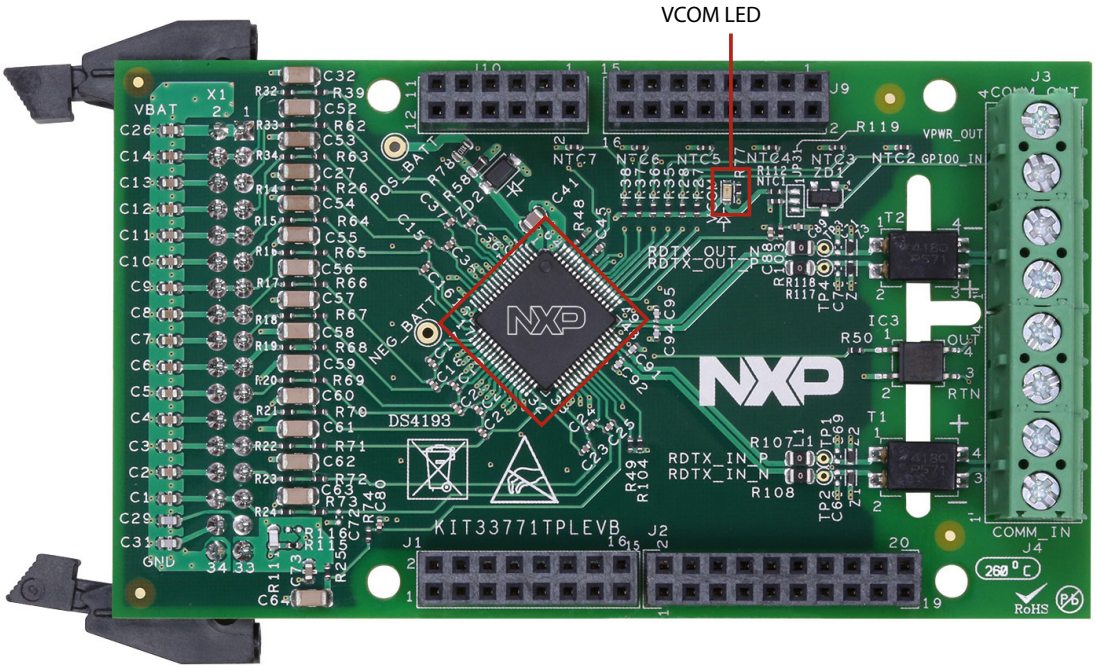

Figure 4. VCOM LED

The VCOM LED indicates when the device is in normal mode. Upon reset, the MC33771 enters into normal mode (VCOM lights). If there is no activity on the bus after a timeout period of 60 seconds, the device enters low-power idle mode (VCOM turns off). Once the device is initialized, if no communication occurs on the TPL bus after 1 second, the device switches to sleep mode and the LED turns off (VCOM off). Depending on the device settings, the VCOM LED may flash every second during cyclic acquisition.

3.7 Test point definitions

Figure 5 shows the location of the test points on the board.

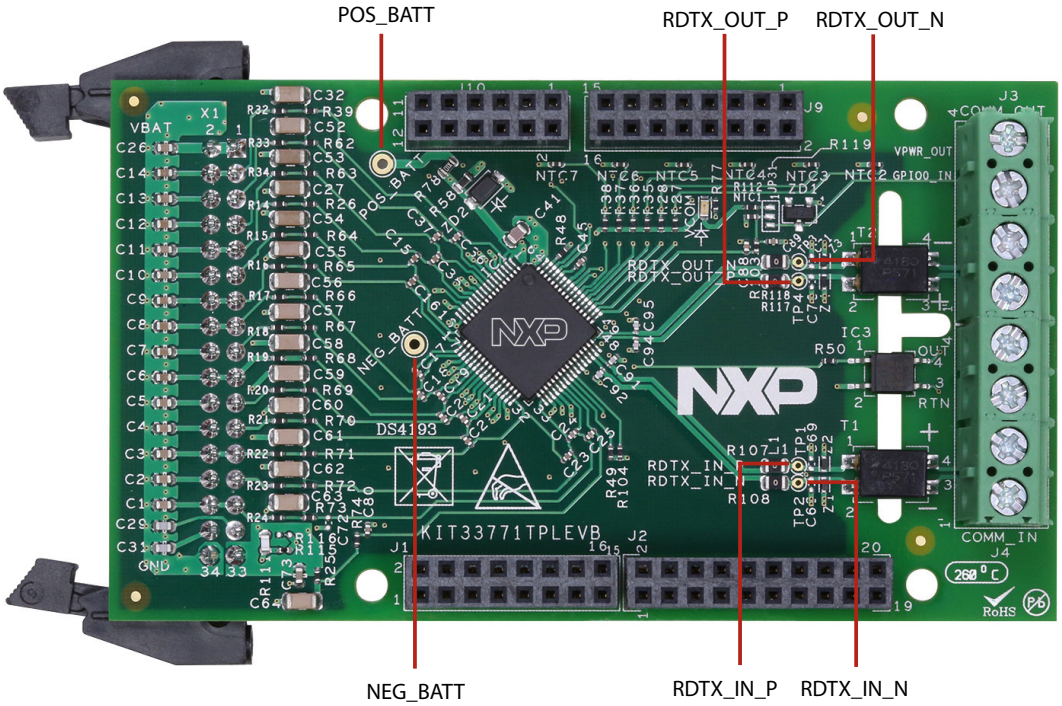

Figure 5. Test points

The following test points provide access to various signals to and from the board.

Table 3. Test points

Test point name	Signal name	Description
RTDX_IN_N	SI/RDTX_IN-	Measures the isolated pulse communication sent to the device
RTDX_IN_P	SCLK/RTDX_IN+	
RTDX_OUT_N	RTDX_OUT-	
RTDX_OUT_P	RTDX_OUT+	
NEG_BATT	GNDREF	Ground reference of the device
POS_BATT	V_{BAT}	Positive V_{BAT}

3.8 Connectors

Figure 6 shows the location of connectors on the board. Table 4, Table 5, and Table 6 list the pinouts for each connector.

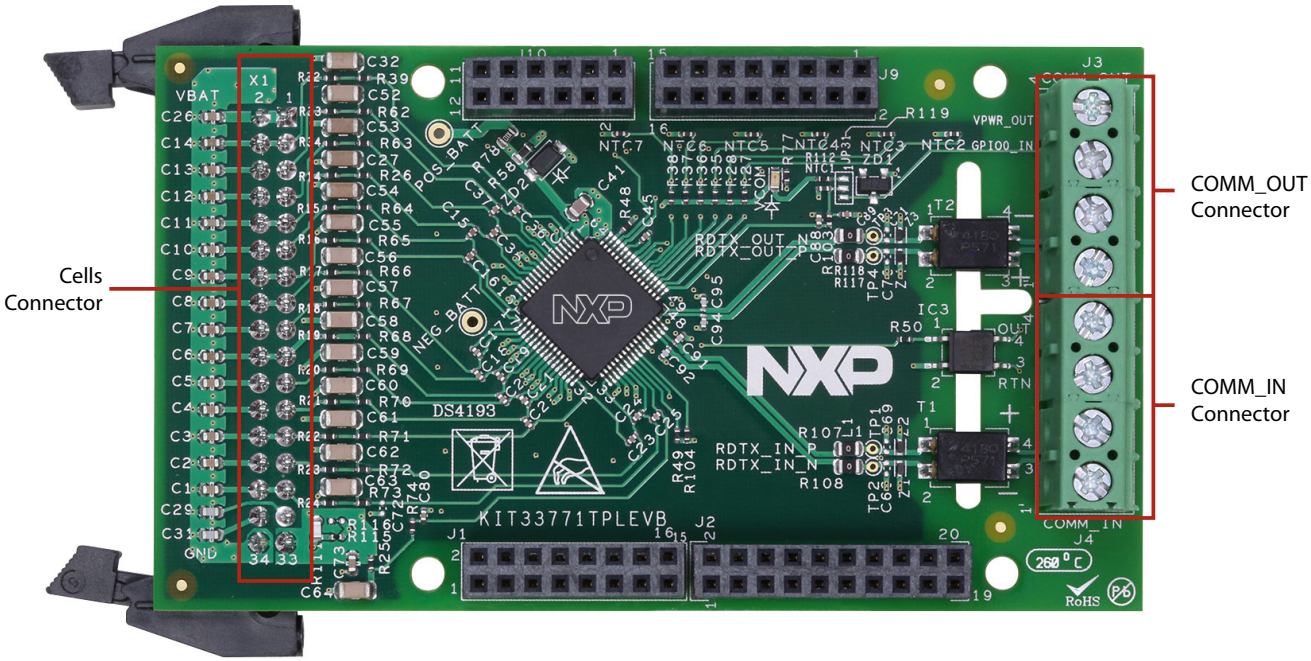

Figure 6. Connectors

Table 4. COMM_IN connector (J4)

Pin #	Name	Description
1	COMM_IN-	Receive/transmit input negative
2	COMM_IN+	Receive/transmit input positive
3	FAULT_RTN	Fault return
4	FAULT_OUT	Fault output

Table 5. COMM_OUT connector (J3)

Pin #	Name	Description
1	COMM_OUT+	Receive/transmit output positive
2	COMM_OUT-	Receive/transmit output negative
3	GPIO_0	General purpose analog input or GPIO or wake-up or fault daisy chain
4	VPWR_PU	External device supply

Table 6. Cells connector

Pin #	Connection	Description
X1-1 X1-2	VBAT	MC33771 Power supply
X1-3 X1-4	CT_14 CB_14	Cell pin 14 input with external LPF resistor. Cell balance driver. Terminate to cell 14 cell balance load resistor
X1-5 X1-6	CT_13 CB_14:13_C	Cell pin 13 input with external LPF resistor. Cell balance 14:13 common. Terminate to cell 14 and 13 common pin

Table 6. Cells connector (continued)

Pin #	Connection	Description
X1-7 X1-8	CT_12 CB_13 / CB_12	Cell pin 12 input with external LPF resistor. Cell balance driver. Terminate to cell 13 and 12 cell balance load resistor
X1-9 X1-10	CT_11 CB_12:11_C	Cell pin 11 input with external LPF resistor. Cell balance 12:11 common. Terminate to cell 12 and 11 common pin
X1-11 X1-12	CT_10 CB_11 / CB_10	Cell pin 10 input with external LPF resistor. Cell balance driver. Terminate to cell 11 and 10 cell balance load resistor
X1-13 X1-14	CT_9 CB_10:9_C	Cell pin 9 input with external LPF resistor. Cell balance 10:9 common. Terminate to cell 10 and 9 common pin
X1-15 X1-16	CT_8 CB_9 / CB_8	Cell pin 8 input with external LPF resistor. Cell balance driver. Terminate to cell 9 and 8 cell balance load resistor
X1-17 X1-18	CT_7 CB_8:7_C	Cell pin 7 input with external LPF resistor. Cell balance 8:7 common. Terminate to cell 8 and 7 common pin
X1-19 X1-20	CT_6 CB_7 / CB_6	Cell pin 6 input with external LPF resistor. Cell balance driver. Terminate to cell 7 and 6 cell balance load resistor
X1-21 X1-22	CT_5 CB_6:5_C	Cell pin 5 input with external LPF resistor. Cell balance 6:5 common. Terminate to cell 6 and 5 common pin
X1-23 X1-24	CT_4 CB_5 / CB_4	Cell pin 4 input with external LPF resistor. Cell balance driver. Terminate to cell 5 and 4 cell balance load resistor
X1-25 X1-26	CT_3 CB_4:3_C	Cell pin 3 input with external LPF resistor. Cell balance 4:3 common. Terminate to cell 4 and 3 common pin
X1-27 X1-28	CT_2 CB_3 / CB_2	Cell pin 2 input with external LPF resistor. Cell balance driver. Terminate to cell 3 and 2 cell balance load resistor
X1-29 X1-30	CT_1 CB_2:1_C	Cell pin 1 input with external LPF resistor. Cell balance 2:1 common. Terminate to cell 2 and 1 common pin
X1-31	ISENSE_+	Current measurement input+ with external filter RC
X1-32	ISENSE_--	Current measurement input- with external filter RC
X1-33	CT_REF	Cell pin REF input with external LPF resistor.
X1-34	GND CB_1	Negative_Battery Cell balance driver. Terminate to cell 1 cell balance load resistor

3.9 External EEPROM

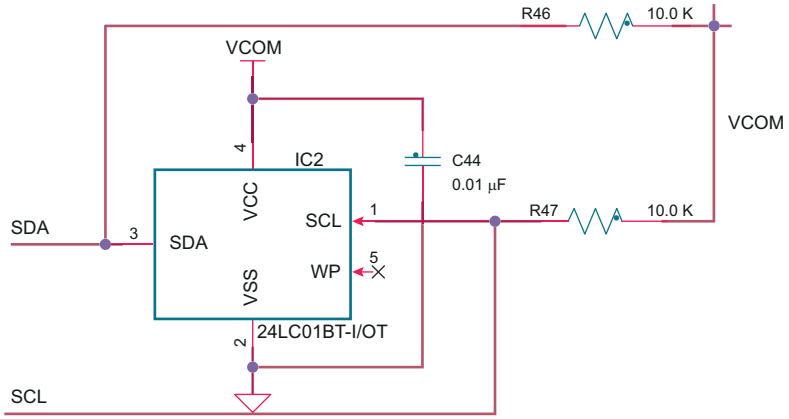

Figure 7. External EEPROM

The KIT33771TPLEVB has an integrated gateway communication link to an external local EEPROM. In high-voltage isolated applications, the MC33771's I²C Communication Interface manages communication with the EEPROM.

After a reset, the device automatically loads the EEPROM calibration parameters into the MC33771 registers.

3.10 GPIO configuration

The KIT33771TPLEVB offers seven customizable GPIOs [GPIO_0...GPIO_6] for measuring external temperature with a bridge divisor. [GPIO_0] can be used as the input for wake-up or fault daisy chain.

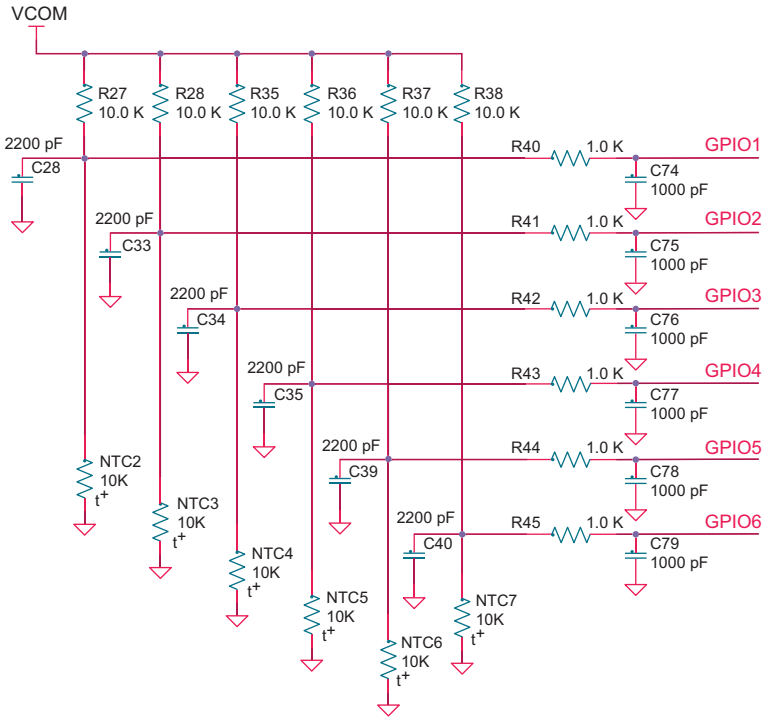

Figure 8. External temperature sensing

3.11 Cell terminal voltage measurement

The differential measurement of each cell terminal input is designed to function in conjunction with an external anti-aliasing filter with a corner frequency.

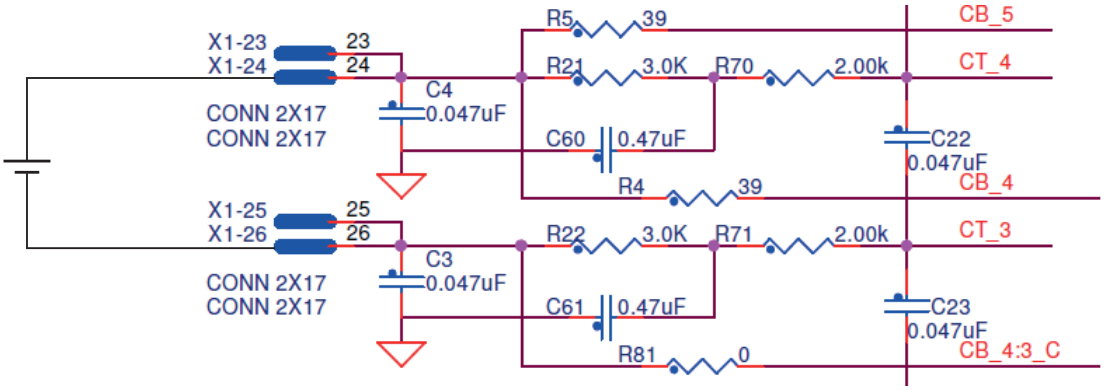

Figure 9. Cell sensing filter

3.12 Fault detection

The KIT33771PTLEVB uses an optocoupler to detect a fault that is dependent on user defined internal or external faults.

The Fault signal can be chained between EVBs and can be made available on the controller inputs. With two KIT33771TPLEVB boards, the fault is chained as shown below.

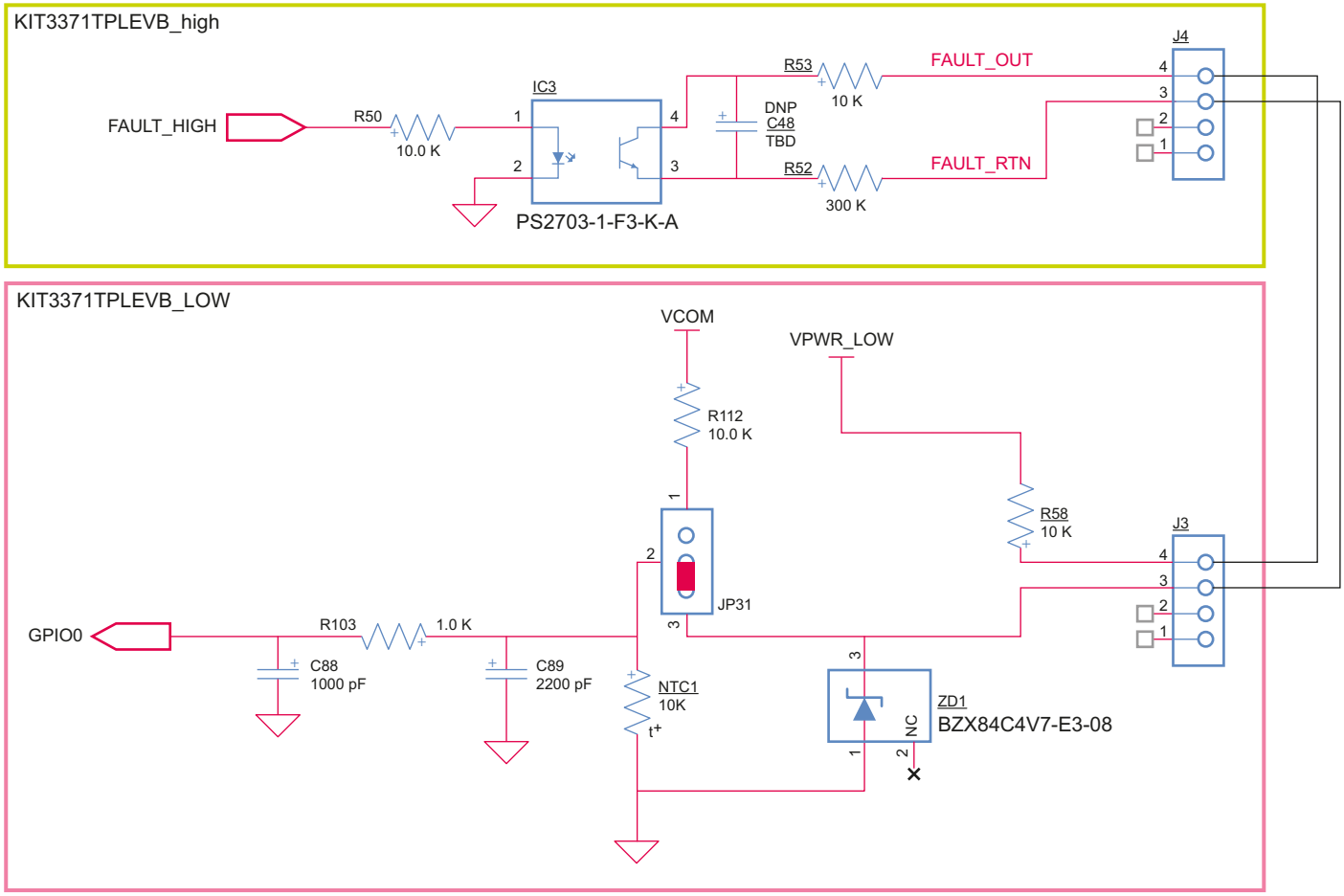

Figure 10. Fault detection

3.13 Bus terminal communication

The transformers isolate communication between the MC33771 and the pack controller and between each MC33771. They are protected against ESD (Z1, Z2, Z3, Z4). There are significant advantages to using transformers for isolation and communication:

- High degree of voltage isolation
- Communication rates of 2.0 MHz with very low radiated emissions
- Ability to force the secondary signals to be true differential reducing radiated emissions
- Ability to loop the network back to the pack controller

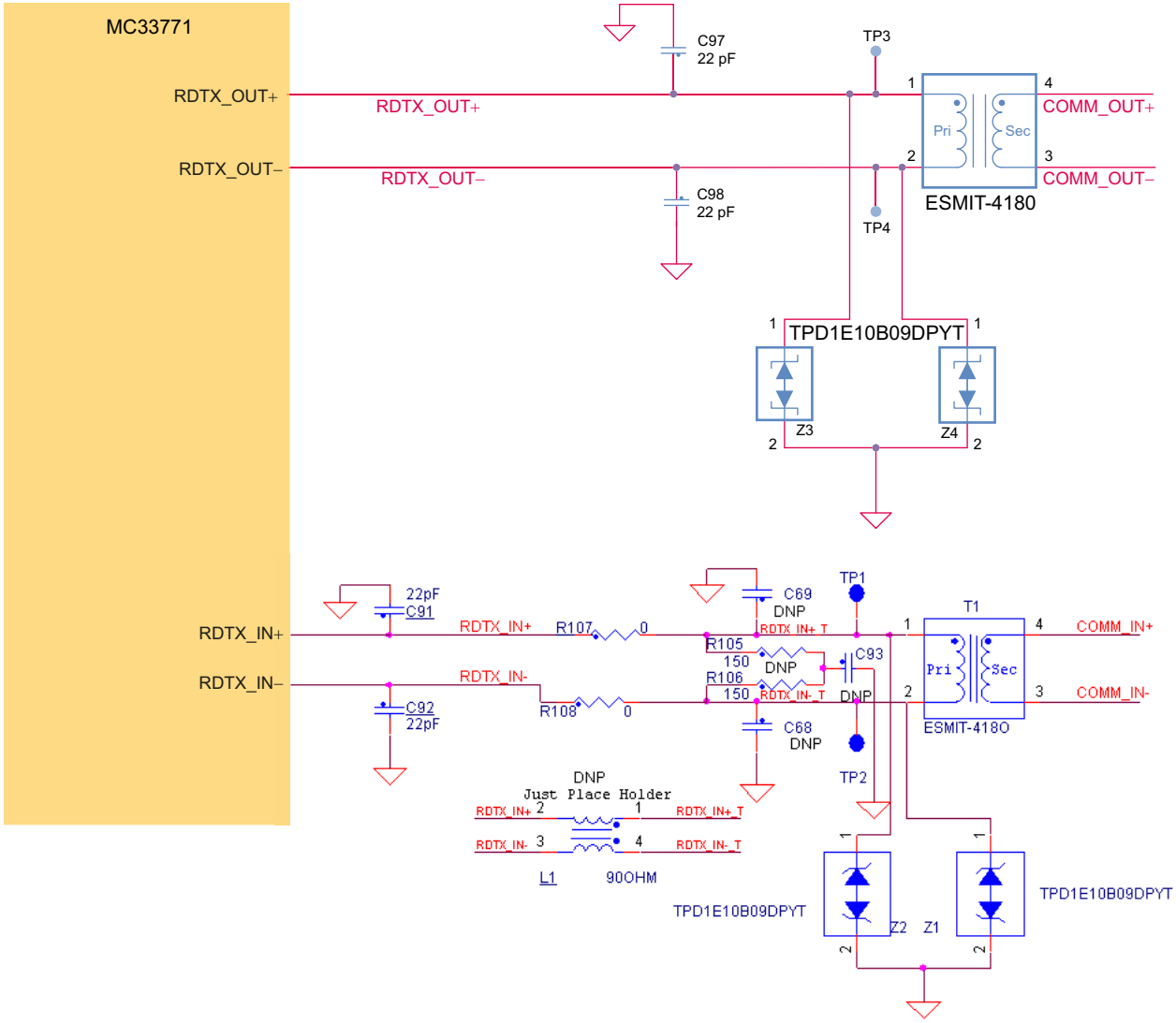

Figure 11. Bus terminal communication

Some component values may be placed and adjusted for EMC purpose: C91 (default 22 pf), C92 (default 22 pF), R107, R108, C68, C69, and the pi filter made of R105, R106 and C93. By default, all other components (except C91 and C92) are not populated.

4 Accessory transceiver board

The KIT33771TPLEVB kit is designed for use with the KIT33664AEVB in high-voltage isolated applications which provide a SPI to high speed isolated communication interface. The KIT33664AEVB includes a MC33664 isolated network high speed transceiver. MCU SPI data bits are directly converted to pulse bit information.

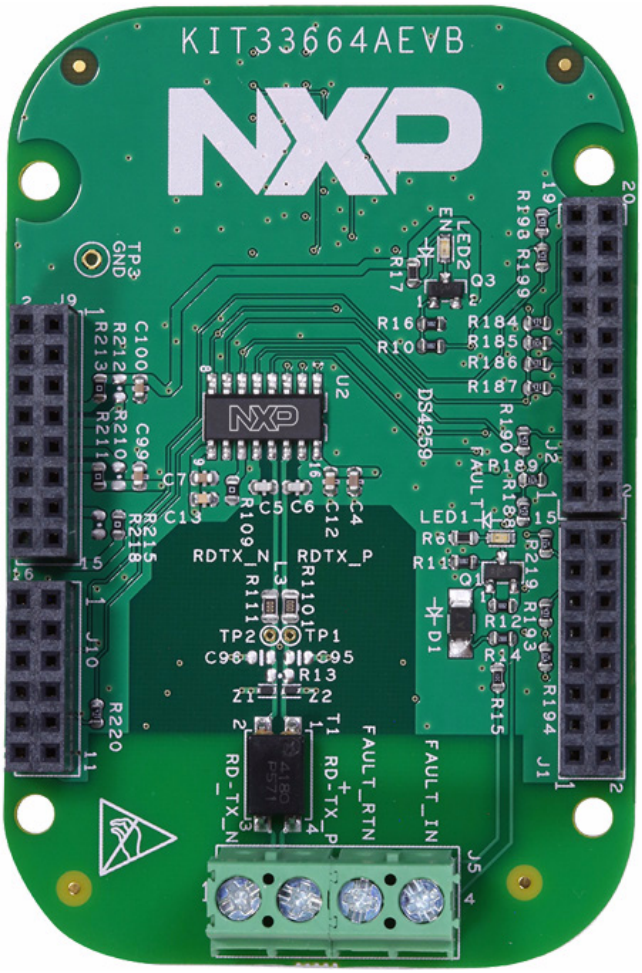

Figure 12. KIT33664AEVB

5 Configuring the hardware

5.1 Battery stack connection

A minimum of eight cells and a maximum of 14 cells can be monitored.

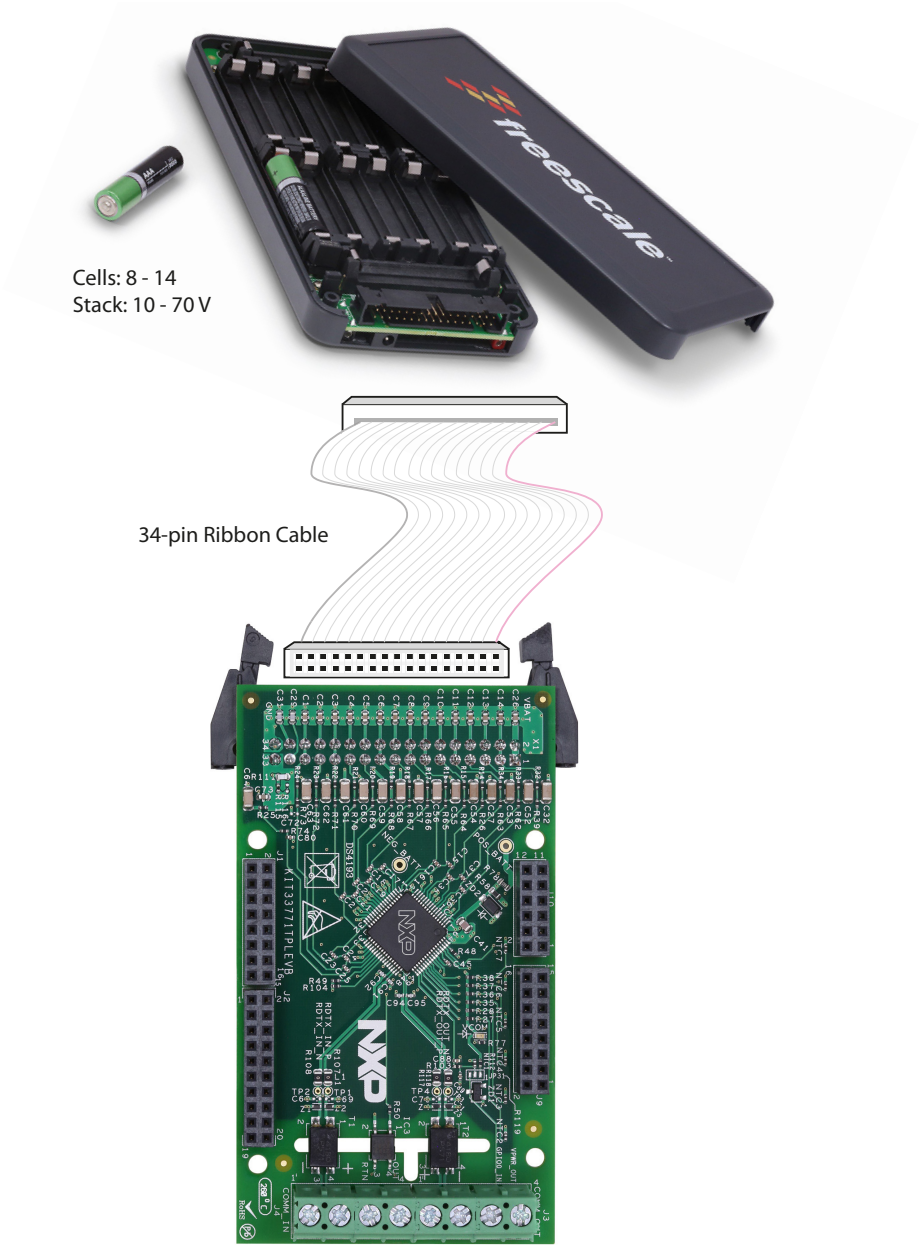

Figure 13. Battery stack connection

5.2 Isense connection

A 0.1 Ω shunt resistor is available on the KIT33771TPLEVB for current measure during demonstrations. It is also possible to use an external shunt for current measure by disconnecting the embedded one.

5.2.1 Using the embedded 0.1 Ω shunt (default configuration)

The current should be limited to ±500 mA to avoid any damage of the EVB.

5.2.1.1 Configuration 1: measuring external load and KIT33771TPLEVB currents (default configuration)

To measure both currents:

1. Make sure that R109, R110, R111 (0.1 Ω shunt) and R115 are populated and R116 is not placed (see Figure 14).
2. Connect the battery stack to the X1-1 to X1-4 connector pins (positive) and the X1-33 connector pins (negative). The current is considered as negative.
3. For optional external loads, connect the negative side of the external load should be to the X1-34 connector pins. In this case, both currents are added.

5.2.1.2 Configuration 2: measuring an external load current only

To measure the external load current only:

1. Make sure that R109, R110, R111, and R116 are populated and R115 is not placed.
2. Connect the battery stack should be connected to the X1-1 to X1-4 connector pins (positive) and the X1-33 connector pin (negative).
3. Connect the load negative side to the X1-32 connector pin.

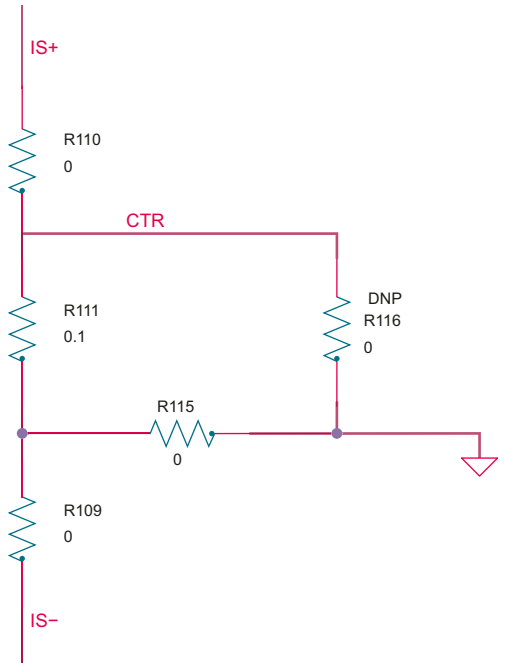

Figure 14. Resistor configuration

5.2.2 Connecting an external shunt (disconnecting the embedded shunt)

To connect an external shunt, disconnect the embedded shunt by removing resistors R109, R110, R111, R115, R116.

5.2.2.1 Configuration 1: measuring external loads and KIT33771TPLEVB currents

Figure 15 illustrates the connections required to measure both external load currents and KIT33771TPLEVB loads.

1. Connect the battery stack to the X1-1 to X1-4 pins (positive) and X1-33, X1-31 pins (negative).
2. Connect one side of the external shunt to the X1-33 and X1-31 pins. Connect the other side to X1-34 and X1-32 pins.

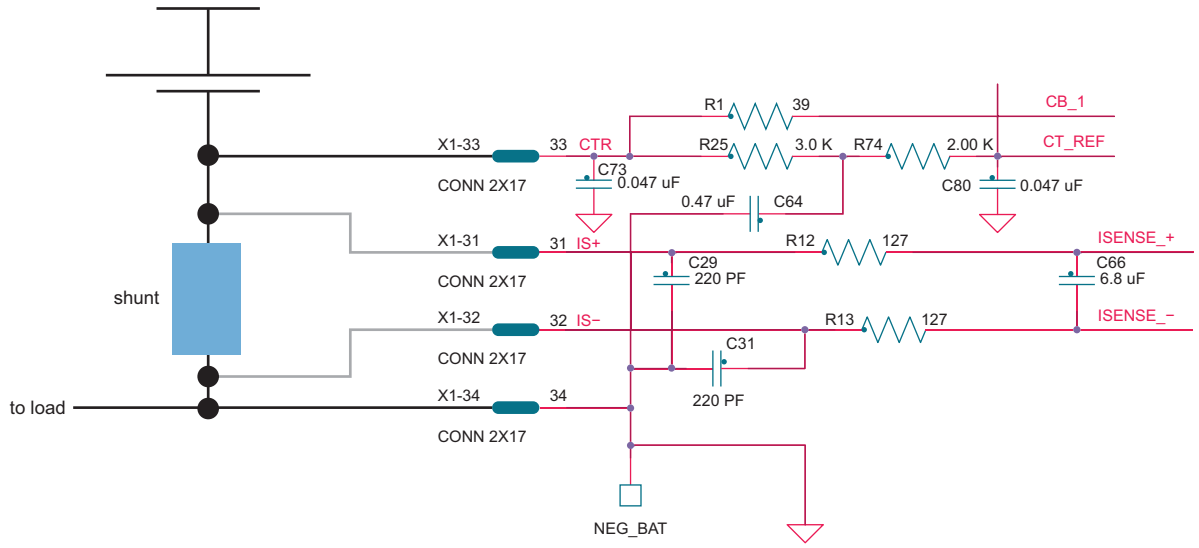

Figure 15. ISENSE connection

5.2.2.2 Configuration 2: measuring an external load current only

Figure 16 illustrates the connections required to measure an external load current only.

1. Connect the positive side of the battery stack to the X1-1 to X1-4 pins. Connect the negative side of the battery stack to the X1-33 and the X1-34 pins.
2. Connect one side of the external shunt to the load and to X1-31 (Isense+). Connect the other side of the external shunt to X1-34 (EVB neg) and X1-32 (Isense−).

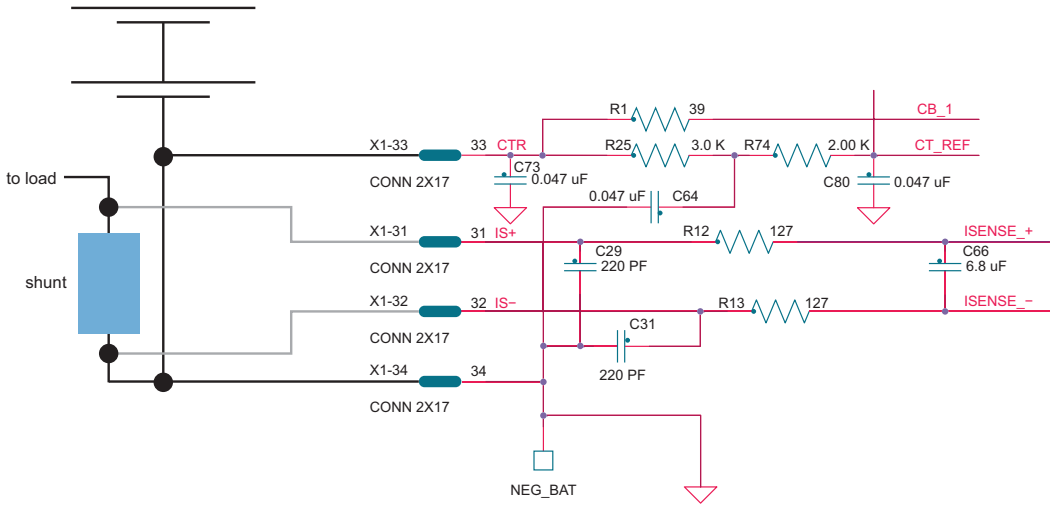

Figure 16. ISENSE connection for an external load

5.3 JUMPER connection

One hand-soldered jumper (JP31) on the EVB is used to set the GPIO0 pin input. In position 1-2 (default), the NTC (NTC1) is connected to GPIO0 pin of the MC33771. This input can be used as analog input. If the jumper is placed in position 2-3, the GPIO0 can be used as fault input for fault daisy chain function.

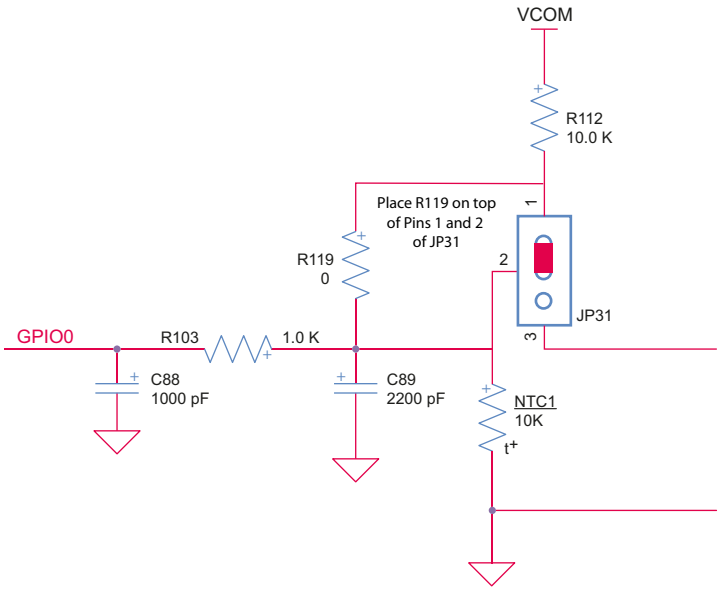

Figure 17. Jumper JP31 connection

5.4 TPL communication connection

In a high-voltage Isolated application with a daisy chain configuration, up to 15 KIT33771TPLEVB boards may be connected with two transformers.

The TPL connections use connectors COMM_IN (J4) and COMM_OUT (J3).

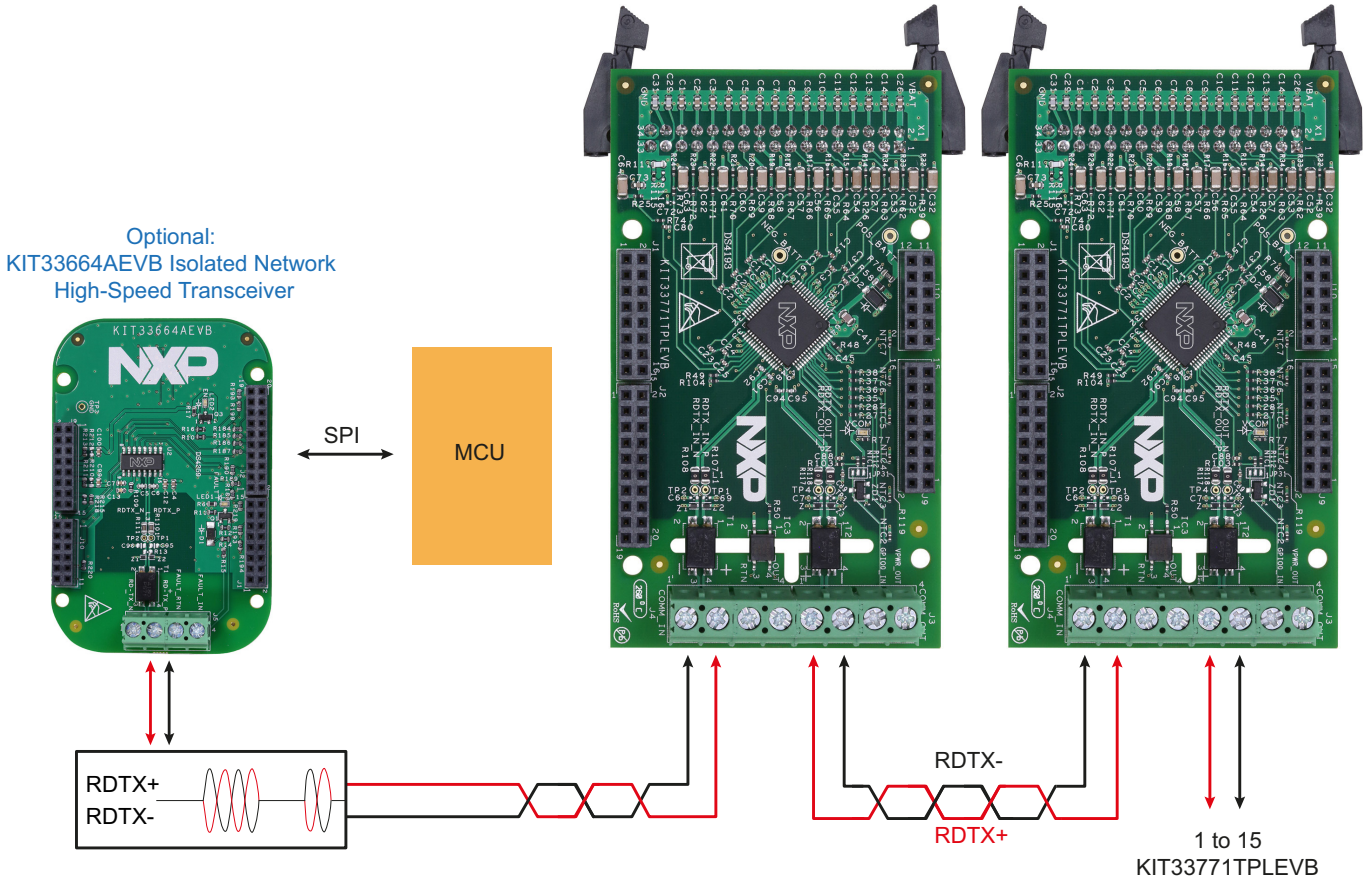

Figure 18. KIT33771TPLEVB Board Setup

5.5 Fault Chain Connection

The FAULT chain connection is optional. When used, it connects through connectors COMM_IN (J4) and COMM_OUT (J3)

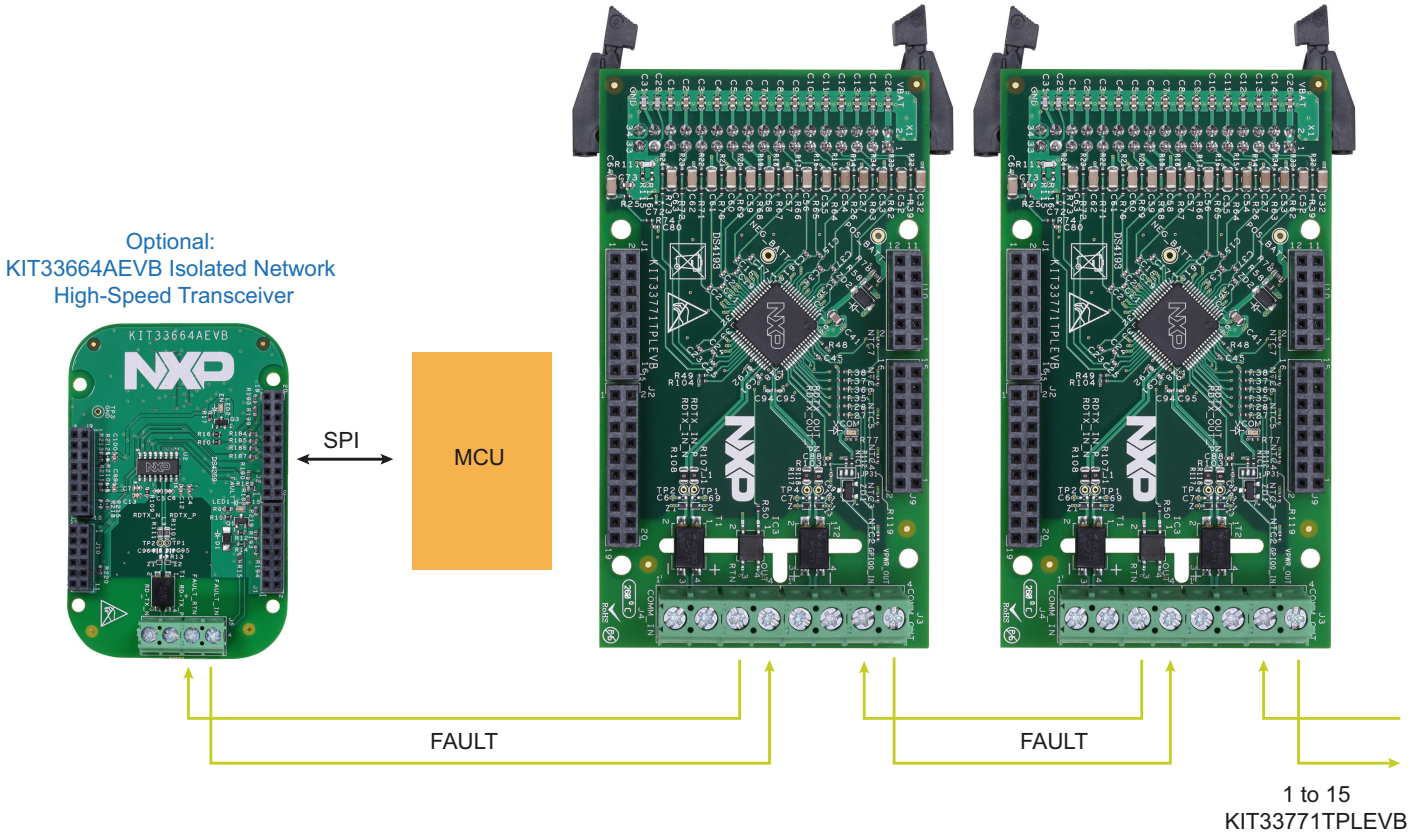

Figure 19. Fault chain connection

6 Schematic

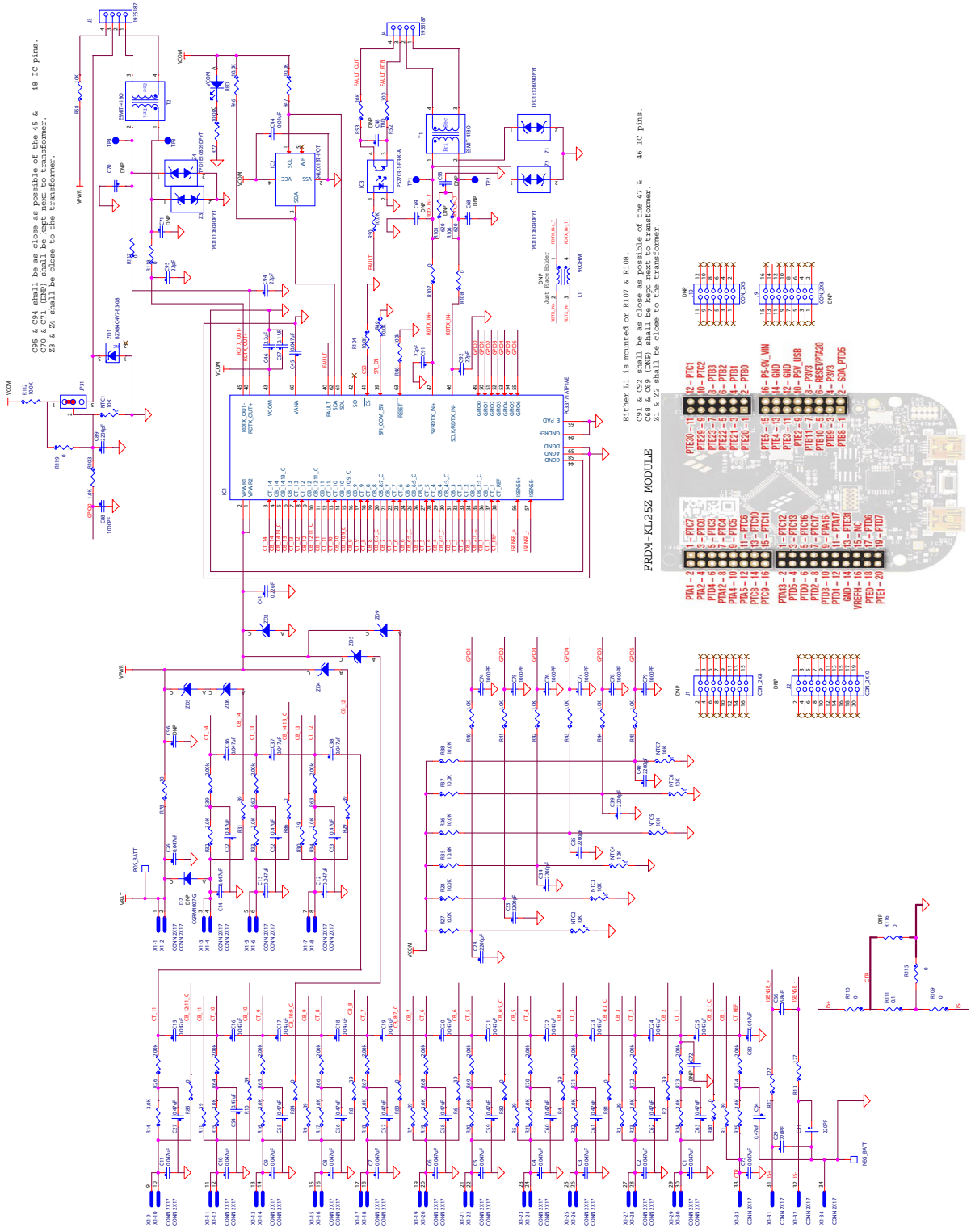

Figure 20. Evaluation board schematic

7 Board Layout

7.1 Assembly Layer Top

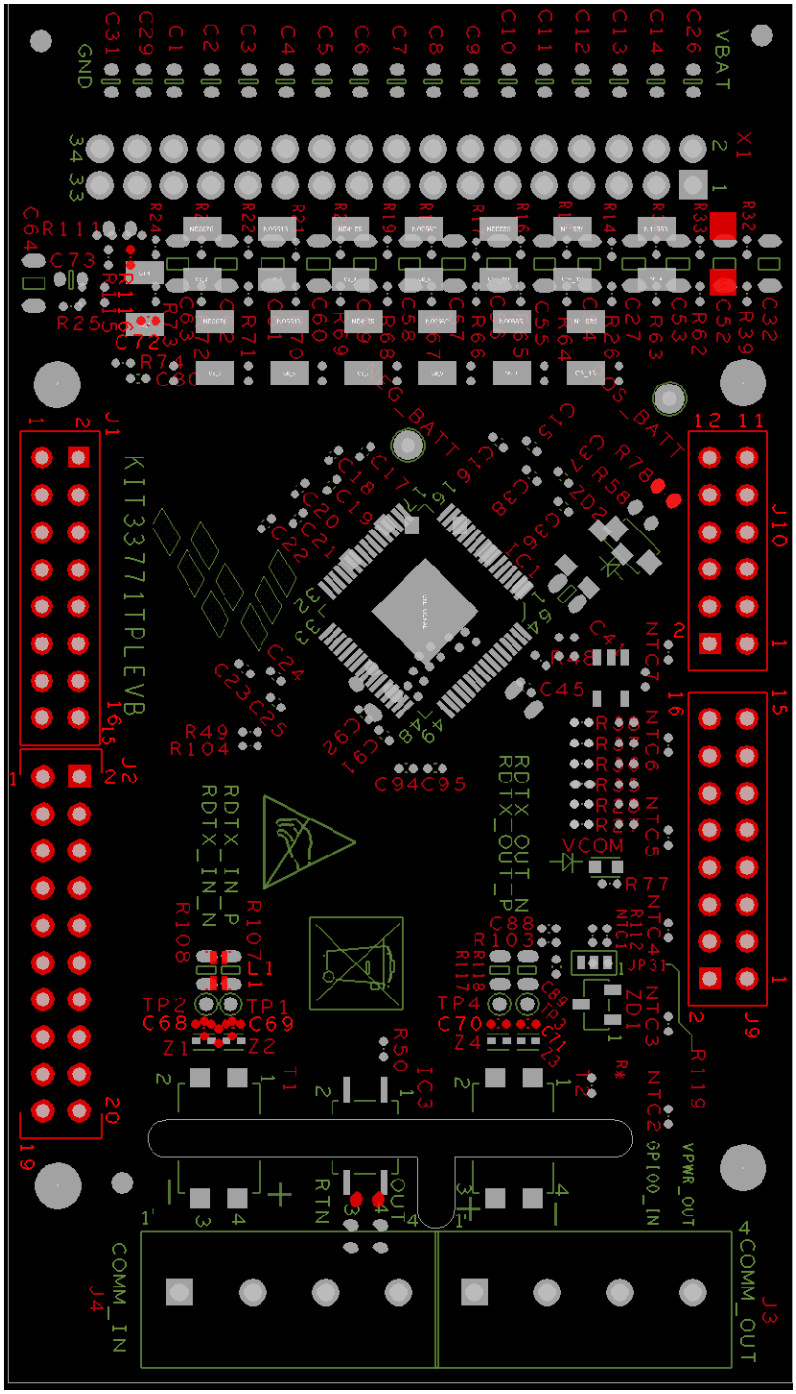

7.2 Assembly Layer Bottom

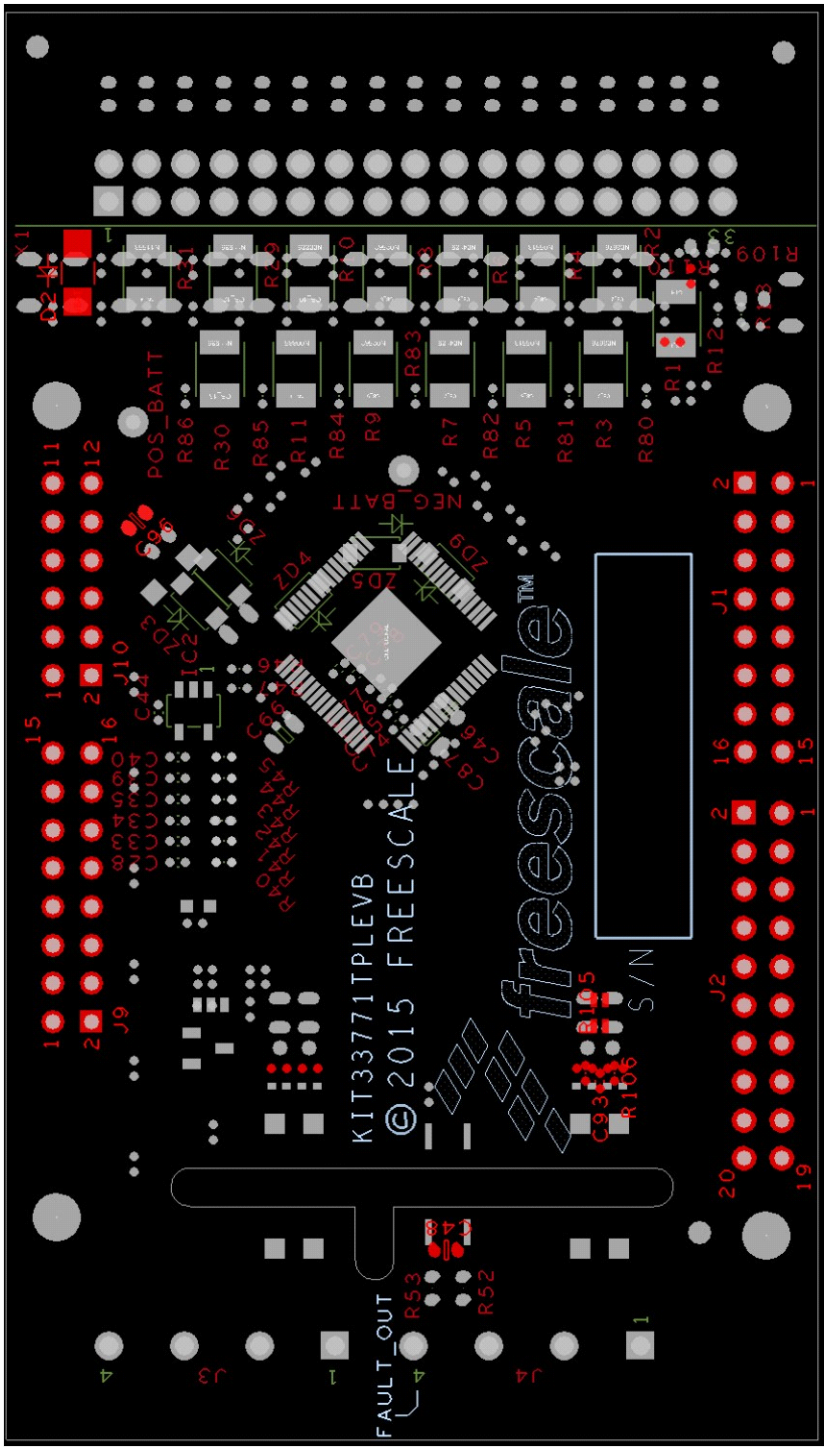

8 Board bill of materials

Table 7. Bill of materials [(1)]

Item	Qty	Schematic label	Value	Description	Part Number	Assy opt
Integrated circuits						
1	1	IC1		Battery Cell Controller 64 LQFP	MC33771ATP1AE	
2	1	IC2		Serial EEPROM SOT23-5L	24LC01BT-I/OT	
3	1	IC3		Optoisolator 3.75 kV DIL4-SMD	PS2703-1-F3-K-A	
Diodes						
4	1	D2	1000 V	Diode General purpose 1 kV 1 A SOD123	CGRM4007-G	(2)
5	1	ZD1	4.7 V	Zener Diode 4.7 V SOT23	BZX84C4V7-E3-08	
6	1	ZD2	75 V	Zener Diode 75 V SOD123	MMSZ5267BT1G	
7	2	ZD3, ZD6	8.2 V	Zener Diode 8.2 V SOD123	MMSZ5237BT1G	
8	1	ZD4	20 V	Zener Diode 20 V SOD123	MMSZ5250BT1G	
9	1	ZD5	33 V	Zener Diode 33 V SOD123	MMSZ5257BT1G	
10	1	ZD9	43 V	Zener Diode 43 V SOD123	MMSZ5260BT1G	
11	4	Z1, Z2, Z3, Z4	10 V TVS	IC ESD Protection 0402	TPD1E10B09DPYT	
LEDs						
12	1	VCOM LED		LED 630 nm Red LED0603	SML-311UTT86	
Capacitors						
13	15	C27, C32, C52, C53, C54, C55, C56, C57, C58, C59, C60, C61, C62, C63, C64	470 nF	100 V Capacitor C1206		
14	16	C1, C2, C3,C4, C5,C6, C7, C8,C9, C10, C11, C12,C13, C14, C26, C73	47 nF	100V Capacitor C0603		
15	16	C15, C16, C17, C18, C19, C20, C21, C22, C23, C24, C25, C36, C37, C38, C45, C80	47 nF	50 V Capacitor C0402		
16	7	C28, C33, C34, C35, C39, C40, C89	2.2 nF	50 V capacitor C0402		
17	2	C29, C31	220 pF	50 V capacitor C0603		
18	1	C41	220 nF	100 V Capacitor C0805		
19	1	C44	10 nF	50 V capacitor C0402		
20	1	C46	2.2 µF	6.3 V capacitor C0603		
21	1	C66	6.8 µF	16 V capacitor C0805		
22	4	C68,C69,C70,C71	22 pF	50 V capacitor C0402		(2)
23	2	C72,C93	47 nF	50 V capacitor C0402		(2)
24	7	C74, C75, C76, C77, C78, C79, C88	1 nF	50 V capacitor C0402		
25	1	C87	100 nF	50 V capacitor C0805		
26	4	C91, C92, C94, C95	22 pF	50 V capacitor C0402		
27	1	C96	47 nF	100 V Capacitor C0603		(2)
Inductors						
28	2	T1, T2	120 uH	Transformer CBM5D33	ESMIT-4180/A	
29	1	L1	90 Ω	Chock_0805	DLW21SN900SQ2B	(2)

Table 7. Bill of materials (continued) [1]

Item	Qty	Schematic label	Value	Description	Part Number	Assy opt
Resistors						
30	14	R1, R2, R3, R4, R5, R6, R7, R8,R9, R10, R11, R29, R30, R31	39 Ω	Resistor 3/4 W R1210		
31	2	R12,R13	127 Ω	Resistor 1/16 W R0402		
32	15	R14, R15, R16, R17, R18, R19, R20, R21, R22, R23, R24, R25, R32, R33, R34	3.0 kΩ	Resistor 1/16 W R0402		
33	15	R26, R39, R62, R63, R64, R65, R66, R67, R68, R69, R70, R71, R72, R73, R74	2.0 kΩ	Resistor 1/16 W R0402		
34	13	R27, R28, R35, R36, R37, R38, R46, R47, R49, R50, R77, R104, R112	10 kΩ	Resistor 1/16 W R0402		
35	7	R40, R41, R42, R43, R44, R45, R103	1.0 kΩ	Resistor 1/16 W R0402		
36	1	R48	100 kΩ	Resistor 1/16 W R0402		
37	1	R52	300 Ω	Resistor 1/10 W R0603		
38	2	R53, R58	10 kΩ	Resistor 1/10 W R0603		
39	1	R78	10 Ω	Resistor 1/10 W R0603		
40	11	R80, R81, R82, R83, R84, R85, R86, R109, R110, R115, R119	0 Ω	Resistor 1/16 W R0402		
41	2	R105,R106	620 Ω	Resistor 1/16 W R0402		(2)
42	4	R107, R108, R117, R118	0 Ω	Resistor 1/8 W R0805		
43	1	R111	0.1 Ω	Resistor 1/5 W R0603		
44	1	R116	0 Ω	Resistor 1/16 W R0402		(2)
45	7	NTC1, NTC2, NTC3, NTC4, NTC5, NTC6, NTC7	10 kΩ	Thermistor R0402	490-6940-6-ND	
Switches, connectors, jumpers, and test points						
46	1	X1		CONN 2x17	N3431-5202RB	
47	2	J3, J4		CONN term block 4POS 5.08 MM PCB	1935187	
48	4	J1, J2, J9, J10				(2)

Notes
1. NXP does not assume liability, endorse, or warrant components from external manufacturers are referenced in circuit drawings or tables.While NXP offers component recommendations in this configuration, it is the customer's responsibility to validate their application.
2. Do not populate

9 Accessory item bill of materials

Table 8. Bill of materials [3]

Item	Qty	Part number	Description
1	1	KIT33664AEVB	NXP MC33664 isolated network high speed transceiver
2	1	M50-9101742	34-Pin ribbon cable

Notes

3. NXP does not assume liability, endorse, or warrant components from external manufacturers are referenced in circuit drawings or tables. While NXP offers component recommendations in this configuration, it is the customer's responsibility to validate their application.

10 References

NXP.com Support Pages	Description	URL
KIT33771TPLEVB	Tool summary page	http://www.nxp.com/KIT33771TPLEVB
MC33771	Product summary page	http://www.nxp.com/MC33771
KIT33771SP1EVB	Tool summary page	http://www.nxp.com/KIT33771SPIEVB
KIT33664AEVB		http://www.nxp.com/KIT33664AEVB

10.1 Support

Visit www.nxp.com/support for a list of phone numbers within your region.

10.2 Warranty

Visit www.nxp.com/warranty to submit a request for tool warranty.

11 Revision history

Revision	Date	Description of changes
1.0	5/2016	• Initial release
2.0	10/2016	• Updated part number for schematic label IC1 in **Table 7**

How to Reach Us:

Home Page:
NXP.com

Web Support:
http://www.nxp.com/support

Information in this document is provided solely to enable system and software implementers to use NXP products. There are no expressed or implied copyright licenses granted hereunder to design or fabricate any integrated circuits based on the information in this document. NXP reserves the right to make changes without further notice to any products herein.

NXP makes no warranty, representation, or guarantee regarding the suitability of its products for any particular purpose, nor does NXP assume any liability arising out of the application or use of any product or circuit, and specifically disclaims any and all liability, including without limitation, consequential or incidental damages. "Typical" parameters that may be provided in NXP data sheets and/or specifications can and do vary in different applications, and actual performance may vary over time. All operating parameters, including "typicals," must be validated for each customer application by the customer's technical experts. NXP does not convey any license under its patent rights nor the rights of others. NXP sells products pursuant to standard terms and conditions of sale, which can be found at the following address:

http://www.nxp.com/terms-of-use.html.

NXP, the NXP logo, Freescale, the Freescale logo, and SMARTMOS are trademarks of NXP B.V. All other product or service names are the property of their respective owners. All rights reserved.

© 2016 NXP B.V.

Document Number: KT33771TPLUG
Rev. 2.0
10/2016